Ideen bewegen mehr

www.cargomaster.org

CargoMaster C120

Translation of the original user manual

CargoMaster C120 S

Handle standard, height-adjustable

CargoMaster C120 F

Handle standard, swivelling

CE

2020-02 (1.1)

EN

AAT Service Concept

Customer service at its best

With our professional service concept, we at AAT once again meet our high quality standards by offering a comprehensive carefree package.

We are at your service!

- **Spare parts**
- **Repair processing**
- **Technical information**
- **Showroom & exhibition devices**
- **Complaints**
- **Rental devices**

Head office

Phone +49 7431 1295-120
E-Mail info@cargomaster.org
www.cargomaster.org

New devices

Phone +49 7431 1295-120
Phone +49 7431 1295-128
Fax +49 7431 1295-35
E-Mail info@cargomaster.org

Service and repairs

Phone +49 7431 1295-550
Phone +49 7431 1295-552
Fax +49 7431 1295-540
E-Mail service@aat-online.de

AAT Alber Antriebstechnik GmbH
Ehestetter Weg 11 · 72458 Albstadt · Germany
Phone: +49 7431 1295-120
Fax: +49 7431 1295-35
info@cargomaster.org · www.cargomaster.org

CE Declaration of Conformity: AAT Alber Antriebstechnik GmbH hereby declares that the CargoMaster C120 complies with the relevant provisions of the EC Directive 2006/42/EC. If any alteration is made to CargoMaster C120 without the agreement of AAT Alber Antriebstechnik GmbH, this declaration shall no longer be valid. The declaration is only applicable to the products with the article numbers: 100816.

The products are marked with CE to ensure conformity with the Directive.

The technical documentation is kept accessible for consultation by the competent authority for at least five years at the above address. A system for market monitoring has been implemented.

Manufacturer's signature:

Martin Kober
(Managing Director)

The CargoMaster C120 has been tested for state-of-the-art technology, as well as for electrical and mechanical safety by TÜV Rheinland AG.

WARNING

Failure to observe this user manual, in particular the safety instructions, can lead to defects in the CargoMaster C120 and endanger the operator and the cargo, as well as affect it in its proper function! There is an increased risk of accidents! In the event of an infringement, claims for warranty and liability are excluded!

The product is state of the art and complies with the associated safety-related requirements. Nevertheless, a low level of residual risks cannot be ruled out. Please observe the safety instructions to this end.

People with visual, reading, or intellectual impairments should print out the user manual available on the website in larger characters or have this manual read to them, if necessary. On our homepage, you will also find all safety-related changes which have been made to the user manual. **The current edition of the user manual is available at:** www.aat-online.de/de/bda/C120

Please note that the colours of the 3D images shown in this document may differ from those of the original product.

Table of Contents

1 Symbols and safety instructions 5

2 Explanation of the symbols on the device 7

3 Product description 8

3.1 Device overview 8
3.2 Intended use 9
3.3 Technical data 10
3.4 Dimensional drawing 11
3.5 Scope of delivery 12
3.6 Accessories 12

4 Starting up 13

4.1 Adjusting the handle standard 13
4.2 Inserting the battery pack 14
4.3 Unfolding and folding the toe plate 14
4.4 Buttons and indicators on the control panel 15
4.5 Turning on the device 15
4.6 Neutral position 16
4.7 Checking the safety brakes 17
4.8 Single-step mode 18
4.9 Checking battery capacity 19

5 Operation 19

5.1 Picking up the cargo 20
5.2 Moving on level ground / overcoming obstacles 21
5.3 Moving on slopes 22
5.4 Climbing stairs - upwards 23
5.5 Climbing stairs - downwards 24
5.6 Laying down on stairs / emergency stop function 25
5.7 Parking 25
5.8 Transportation 26

6 Care and maintenance 26

6.1 Battery and charger 27
6.2 Checking brake linings / climbing feet linings and air pressure 31
6.3 Cleaning 31
6.4 Replacing fuses 32
6.5 Disposal 32
6.6 Long-term storage 33

7 Fault conditions and troubleshooting 33

8 Warranty and liability 35

9 Recalls and corrective actions 35

1 Symbols and safety instructions

DANGER – Imminent DANGER
If this hazardous situation is not avoided, it will result in severe or possibly fatal injuries!

WARNING – Possibly imminent DANGER
If this hazardous situation is not avoided, it might result in severe or possibly fatal injuries!

CAUTION – Possibly imminent danger or potentially harmful situation
If this hazardous situation is not avoided, it may result in minor injuries or damage to property!

NOTE – Information by the manufacturer

General safety instructions

NOTE

Read the user manual prior to start-up and observe the warning notices and safety instructions.

Keep user manual in a safe place.

The C120 may only be operated by persons who have obtained appropriate training and are physically and mentally able to operate the C120 safely. This also includes adequate eyesight.

Training may only be carried out by the manufacturer, the AAT field service staff or by certified partners.

In the event of reading disabilities, cover training content in more depth verbally.

Minors below the age of 16 are not allowed to operate the C120!

Minors of at least 16 years are allowed to operate the C120, but only under supervision!

Stability tests were performed under laboratory conditions. C120 may behave differently under real conditions compared to laboratory tests.

CAUTION

External heat sources may cause the surface temperature to rise (e.g. sunlight)! Do not touch the affected surfaces. There is a risk of burns!

Do not exceed the permitted lifting capacity. When overloaded, the C120 may be damaged!

The C120 is not made exclusively out of flame retardant materials. Keep the C120 away from sources of ignition.

WARNING

Never touch rotating/moving parts. There is a risk of crushing!

DANGER

Do not use the C120 in rain, wet conditions, snow or black ice. There is a risk of accidents due to the reduced braking effect!

Only use the C120 if both safety brakes are operational. There is a risk of accidents!

Do not use the C120 on escalators or travelators. There is a risk of falling! The cargo may fall out!

The operability of the C120 may be influenced by electromagnetic fields (e.g. by mobile phones, electric generators, or high-voltage sources)!

The C120 may interfere with highly sensitive electromagnetic fields of other electronic devices (e.g. anti-theft devices). Do not operate the C120 in the proximity of medical devices with e.g. a life support function, nor close to diagnostic devices.

2 Explanation of the symbols on the device

Symbol	Explanation
CE	**CE label** The product complies with the relevant provisions of the EC Machinery Directive 2006/42/EC.
SN	**SN** Serial number of the product (e.g. C120XXXXXXX)
	Note User manual Observe the user manual.
	Voltage (V = Volt)
	Adhesive label "Do not reach into" There is a risk of injuries to the hands due to being pulled in and crushing.
	Adhesive label "Do not step on this surface" There is a risk of injuries to the feet due to being pulled in and crushing.

3 Product description

3.1 Device overview

Information by the manufacturer: For a simplified assignment of the individual components, the numbers listed here are cited in full the first time they appear in the following chapters.

① Control panel
② Handle standard, height-adjustable
③ Wheel (standard pneumatic tyre)
④ Toe plate
⑤ Safety brake with brake wheel
⑥ Brake lever
⑦ Battery indicator
⑧ Continuous climbing mode / single-step mode buttons
⑨ Lashing strap
⑩ Battery pack
⑪ Locking screw, height adjustment for handle standard
⑫ Spiral cable
⑬ Speed buttons
⑭ UP button
⑮ DOWN button
⑯ ON/OFF button
⑰ Climbing leg
⑱ RUN button

3.2 Intended use

The stair climber C120 is used to transport cargoes safely over stairs (upwards and downwards). In doing so, both straight and spiral stairs can be travelled. Driving on slopes is possible, too.

Any other use is considered not in compliance with the intended use.

The C120 was developed to be operated by a single person. However, the use of a stair climber requires a higher level of skill and experience than the use of a manual hand truck.

This user manual applies to the device types CargoMaster C120 S and CargoMaster C120 F. The only difference between these stair climbers is the type of the handle standard. The differences are described at the relevant positions in this user manual. Any further information about handling and operating apply to both device types.

3.3 Technical data

Technology	C120
Dimensions	Height: min. 1066 mm - max. 1614 mm; width: 493 mm Depth | Depth with folded toe plate: 528 mm | 298 mm
Unladen weight	Battery pack: 4.1 kg Handle/climbing unit: 21.4 kg (with battery pack)
Lifting capacity	120 kg
Climbing speed[1)]	19 to 50 steps/minute
Range per battery charge for an average load of approx. 75 kg[1)]	Approx. 25 floors (accounts for approx. 375 steps)
Range per battery charge for maximum load of 120 kg[1)]	Approx. 17 floors (accounts for approx. 255 steps)
Maximum height of step	210 mm
Minimum depth of step[2)]	140 mm
Required step width (straight stairs)	Width device/cargo + 100 mm
Minimum platform size (U-shaped stairs)	Min. 1350 x 1350 mm + depending on the load
Batteries	Lead gel batteries 2 x 12 V / 5 Ah
Direct current motor	24 V / 300 W
Sound pressure level	The A-weighted sound pressure level of the device is typically below 70 dB(A)
Storage/operating temperature: device	0 °C to +60 °C / -20 °C to +50 °C
Storage/operating/charging temperature: Battery pack	0 °C to +40 °C / -20 °C to +50 °C
Adhesive label with serial number	On the left side of the housing
IP protection class	IPX4

1) The climbing speed and the reach may decrease with an increased weight of the cargo.

2) Any steps of a smaller depth may not be travelled as in this case it is no longer possible for the wheel to be set down safely.

3.4 Dimensional drawing

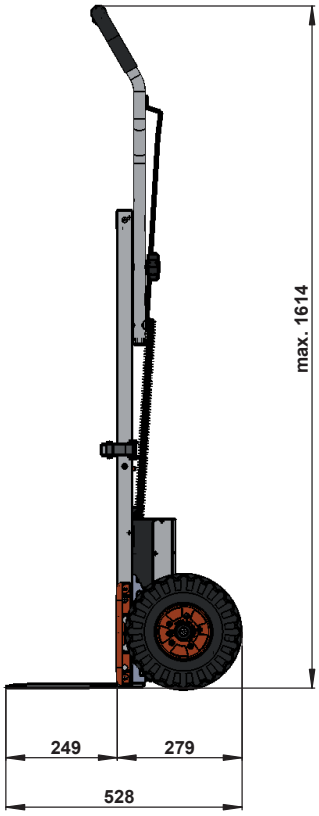

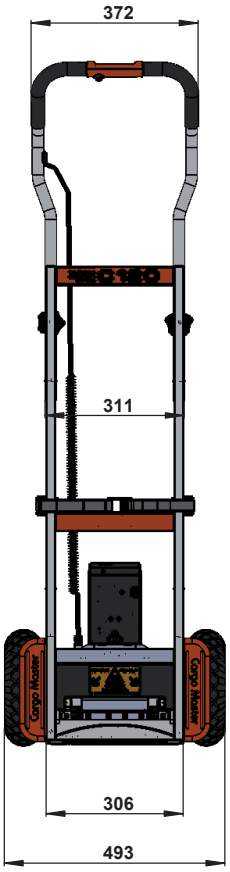

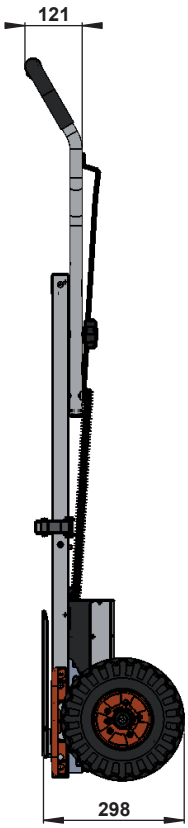

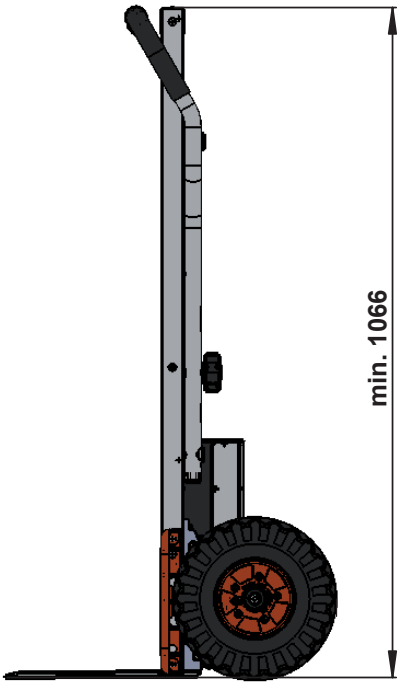

3.5 Scope of delivery

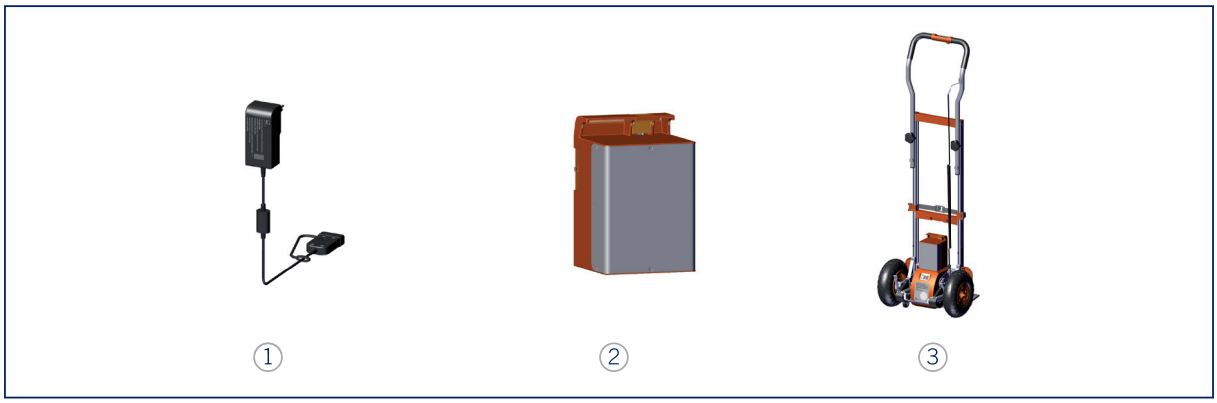

① Charger incl. instructions

② Lead gel battery pack with locking device

③ CargoMaster C120 incl. lashing strap

3.6 Accessories

NOTE - Only use accessories from AAT Alber Antriebstechnik GmbH.

① Puncture proof tyres (instead of standard tyres)

② Charging cable for vehicle

③ Additional lead gel battery pack for change

④ Additional Mega battery pack

⑤ Handle standard, swivelling (optionally already included in the scope of delivery)

⑥ Vario handles instead of handle standard (incl. their own user manual)

4 Starting up

NOTE - Store the C120 in a frost-free environment for at least one hour prior to start-up to avoid malfunctions.

4.1 Adjusting the handle standard

WARNING - Fix the handle standard securely with the locking screws! Otherwise, the handle standard may shift unintentionally!

CAUTION - There is a risk of crushing at the slots in the handle standard!

Handle standard, height-adjustable (CargoMaster C120 S)

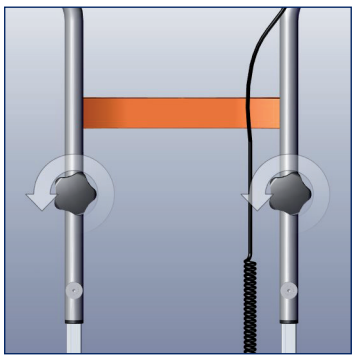

Loosen the locking screws ⑪ of the handle standard ② counterclockwise.

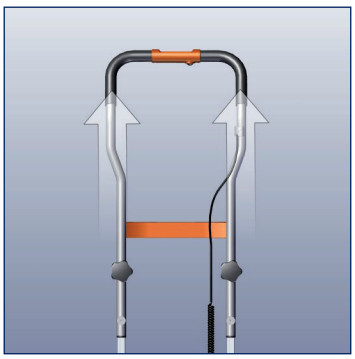

Pull handle standard out to the desired height.
(AAT recommends up to shoulder height.)

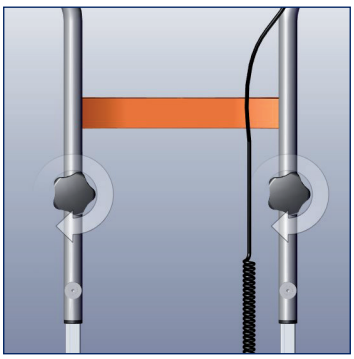

Tighten the locking screws clockwise.

Handle standard, swivelling (CargoMaster C120 F)

Loosen the locking screws of the swivelling handle standard counterclockwise.

Swivel swivelling handle standard standard to the desired angle.

Tighten the locking screws clockwise.

4.2 Inserting the battery pack

WARNING - Fix and lock battery pack so that it cannot become loose.

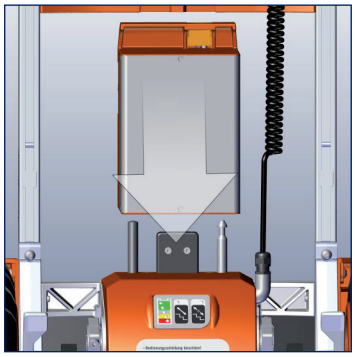

Installation.
Place the battery pack (10) on the locating pins on the drive housing.
The battery pack locks in place automatically.

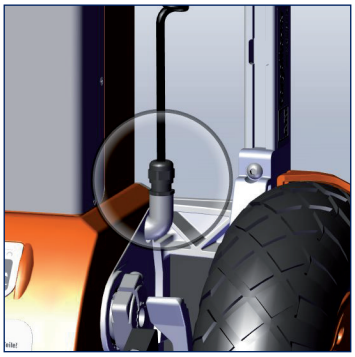

Spiral cable. (12)
The spiral cable is firmly attached to the stair climber and cannot be released.

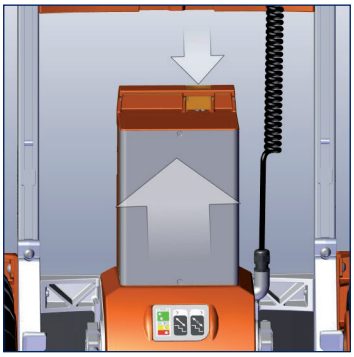

Removal.
Press the release button and pull battery pack off.

4.3 Unfolding and folding the toe plate

Unfolding toe plate (4).
Fold toe plate out downward to the bottom toe plate end stop.

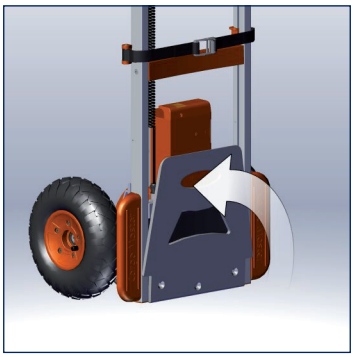

Folding toe plate.
Fold toe plate out upward to the top toe plate end stop.

4.4 Buttons and indicators on the control panel

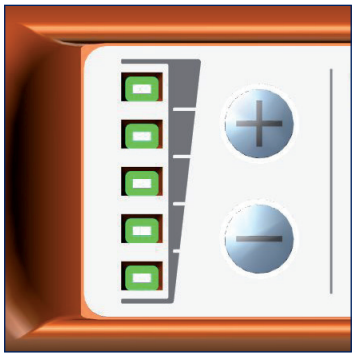

Speed buttons. ⑬
Depending on the selected speed level, a different number of LED will be lit.

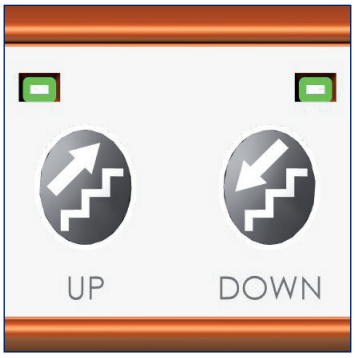

UP button ⑭ **and DOWN button** ⑮**.**

↗ = moving up the stairs (backwards from the operator's perspective)

↙ = moving down the stairs (forwards from the operator's perspective)

ON/OFF button. ⑯

4.5 Turning on the device

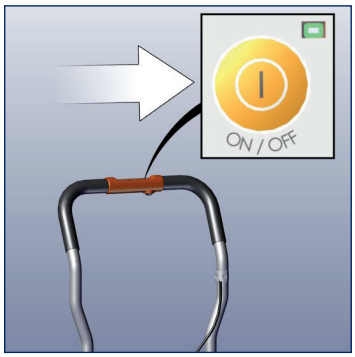

Press ON/OFF button on the control panel ①.

4.6 Neutral position

NOTE - Press the UP button, DOWN button, and RUN button only after a few seconds after turning on.

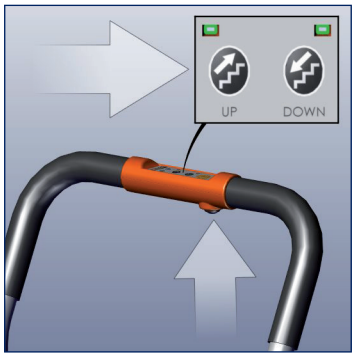

Moving climbing leg (17) to neutral position.
Select climbing direction **UP** or **DOWN**. The associated LED is lit.
Move climbing leg to the uppermost position. To do so, press and hold the RUN button (18).

If the single-step mode (8) is active, the climbing leg is automatically stopped in neutral position (refer to section 4.8).

Incorrect!

4.7 Checking the safety brakes

DANGER - If the safety brakes only take effect on one side or no effect at all:
Do not use the C120. There is a risk of falling! Contact the manufacturer, the AAT field service or a certified partner.

WARNING - Check safety brakes prior to any run and without cargo.

The chassis has a safety brake (5) on each of both sides.

Activate the safety brake on both sides, respectively. To do so, push the brake lever upwards with the foot.

Move climbing leg to neutral position (refer to section 4.6) and tilt the C120 back.

DANGER - Do not support your foot on the housing. There is a risk of crushing!

TEST: Roll the C120 forward and backward.

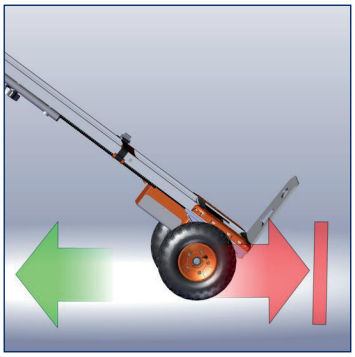

If it is **not** possible to roll the C120 forward, the safety brakes are active.

Pay attention to the note on the housing.

4.8 Single-step mode

DANGER - If the single-step mode has been deactivated (continuous climbing mode), a higher level of experience is required to operate the C120. Refer to sections 5.4 and 5.5.

The C120 must be in the turned-off condition.
Press and hold the RUN button. At the same time, press the ON/OFF button for 2 to 3 seconds.

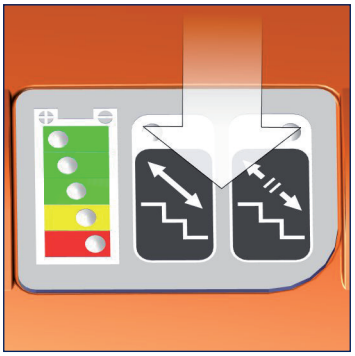

Depending on whether the continuous climbing mode or the single-step mode are active, the associated LED will be lit.

Manufacturer's recommendation:
Only deactivate the single step mode, if the operator is able to handle the C120 safely.

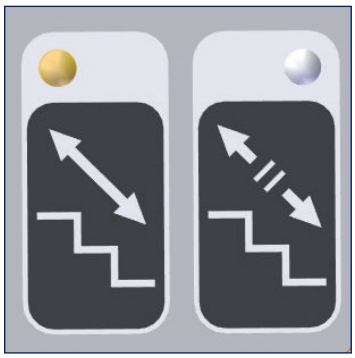

Single step mode deactivated!
= Continuous climbing mode.

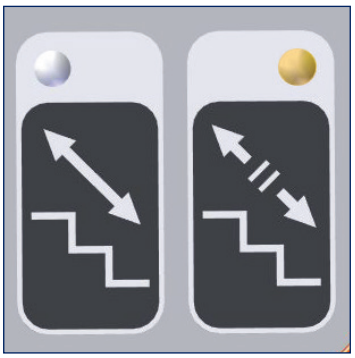

Single step mode active!
= Climbing leg stops after one rotation.

4.9 Checking battery capacity

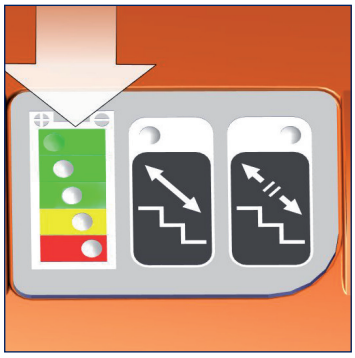

Battery indicator (7)
Green = battery fully charged

Yellow = battery is only partially charged
Charge battery.

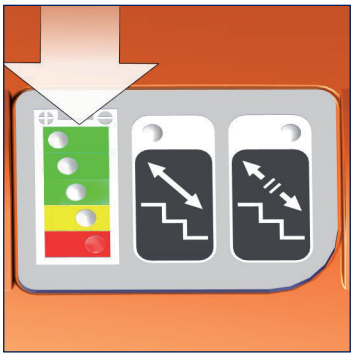

Red = battery depleted
Charge battery.
An acoustic warning sounds every 12 seconds.
The capacity of the batteries will only last for max. 20 - 30 steps!

5 Operation

DANGER - Do not touch the rotating/moving climbing leg. There is a risk of crushing!

DANGER - Do not support your foot on the housing. There is a risk of crushing!

DANGER - Do not allow any persons to stay in the danger zone underneath the C120.

DANGER - Check the safety brakes prior to every use (refer to section 4.7).

WARNING - Wear anti-slip footwear to avoid slipping on the stairs.

WARNING - Always operate the C120 with both hands. This is the only way to perform the climbing procedure safely.

WARNING - Do not travel wet, slippery, or waxed stairs. The steps must be sufficiently deep and stable! Carpet surfaces must be non-slip! There is a risk of falling!

WARNING - Secure the cargo appropriately so that it cannot fall.

NOTE - Practise operating the C120 without cargo, in single-step mode and at the lowest speed.

NOTE - Press the UP button and the DOWN button only after a few seconds after turning on.

5.1 Picking up the cargo

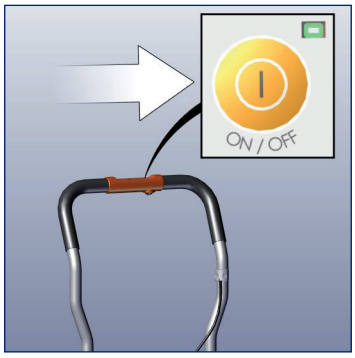

Turn the C120 on.
To do so, press the ON/OFF button.

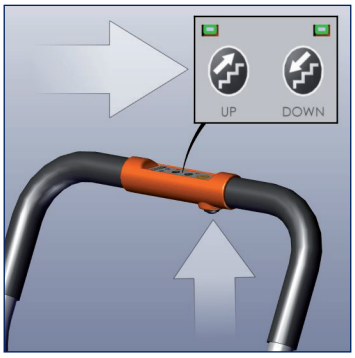

Moving climbing leg to neutral position.
Select climbing direction **UP** or **DOWN**. The associated LED is lit.
Move climbing leg to the uppermost position. To do so, press and hold the RUN button.

Recommendation by the manufacturer:
If the single-step mode is active, the climbing leg is automatically stopped in neutral position (refer to section 4.8).

Move the loading toe plate fully underneath the cargo.

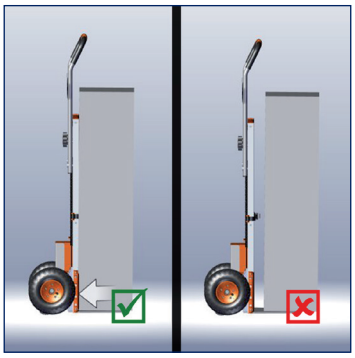

Make sure that the cargo is in tight contact with the C120.

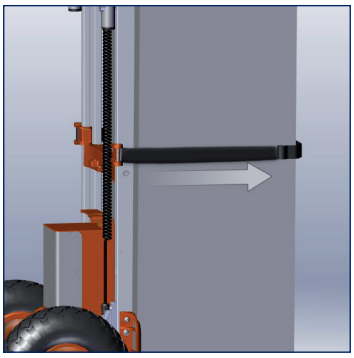

Secure the cargo with on the C120 with the lashing strap.

Adjusting the lashing strap

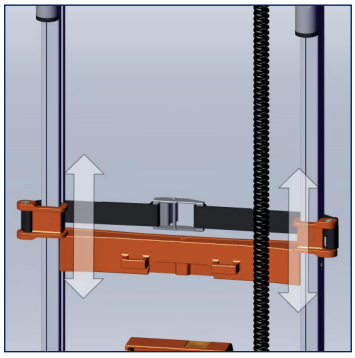

If needed, the position of the lashing strap can be changed.

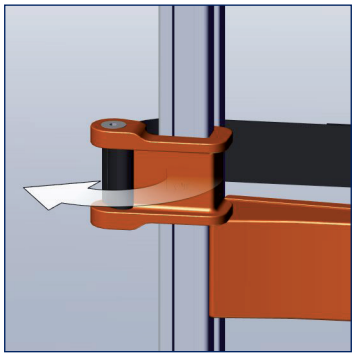

Release the lashing strap clamps on both sides.
Shift lashing strap to the desired position.
Attach the lashing strap clamps again.

5.2 Moving on level ground / overcoming obstacles

DANGER - Do not support your foot on the gear housing. There is a risk of crushing!

CAUTION - Retract the climbing leg. Otherwise, the climbing leg may be damaged!

CAUTION - Only overcome obstacles backwards. Otherwise, the safety brakes may be damaged!

CAUTION - Deactivate the safety brakes! The safety brakes may wear and/or be damaged when moving on level ground!

Move climbing leg to neutral position (refer to section 4.6).

Deactivate the safety brake on both sides, respectively. To do so, push the brake lever downwards with the foot.

Support your foot on a wheel. Tilt the C120 over the wheels.

Pay attention to the note on the housing.

Moving on level ground.
Move/use the C120 as a conventional hand truck.
While doing so, keep the balance.

Overcoming obstacles.
Approach the obstacle backwards with the C120 and then pull the C120 over the obstacle.

5.3 Moving on slopes

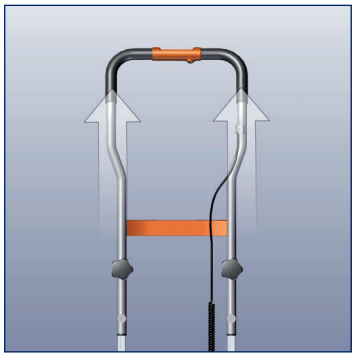

Adjust the handle standard to a suitable height or a suitable angle (refer to section 4.1).

Tilt the C120.

Move climbing leg to neutral position (refer to section 4.6).

Moving down a slope

Approach the slope moving forward.

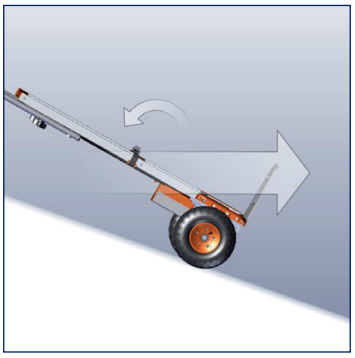

To slow down, tilt the C120 stronger so that the safety brakes can take effect.

Moving up a slope

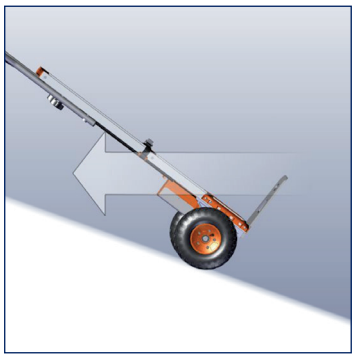

Move up backwards on the slope.

To slow down, tilt the C120 stronger so that the safety brakes can take effect.

5.4 Climbing stairs - upwards

Move climbing leg to neutral position (refer to section 4.6).

Activate the safety brake on both sides, respectively. To do so, push the brake lever upwards with the foot.

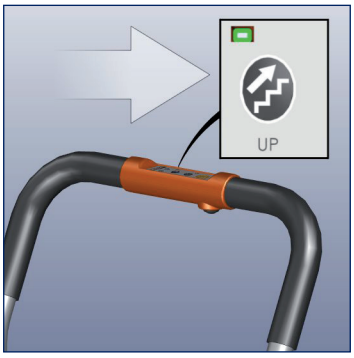

Press the UP button.

Tilt the C120 and keep it balanced.

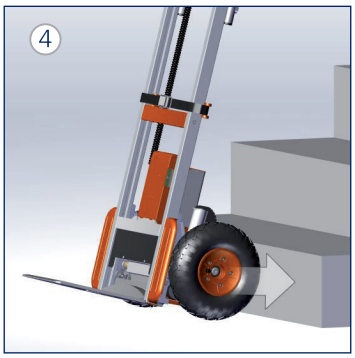

Approach the step until wheels are in contact with it.

Walk up 2 to 3 steps.

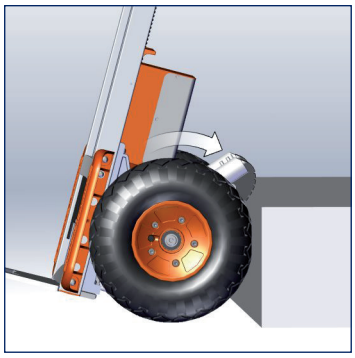

Press and hold the RUN button.
The C120 climbs up.
If the single-step mode is active, the climbing leg stops automatically after one step.

Repeat procedure starting with image 4.

Climbing stairs upwards - spiral stairs
In principle, spiral stairs are climbed in the same way as straight stairs. However, the C120 must be positioned consistently with the spiral of the stairs after every step. Both wheels must be in contact with the step for every climbing procedure.

Manufacturer's recommendation: Activate single step mode. Practise without cargo and at the lowest speed.

5.5 Climbing stairs - downwards

DANGER - As soon as the climbing leg starts taking the load, you will feel the handle standard pulling. Tilt the C120 closer to the ground to counteract the pull.

Move climbing leg to neutral position (refer to section 4.6)

Activate the safety brake on both sides, respectively. To do so, push the brake lever upwards with the foot.

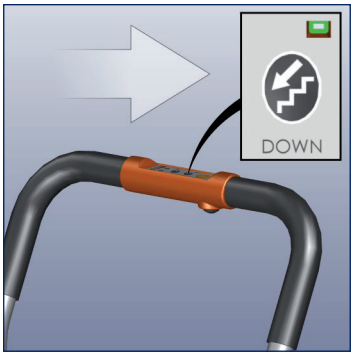

Press the DOWN button.

Tilt the C120 and keep it balanced.

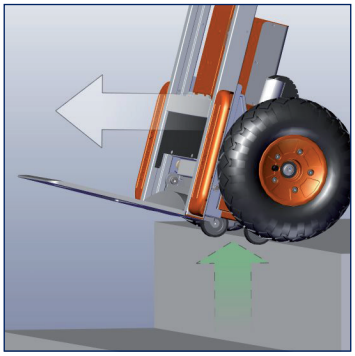

Push the C120 forward until both safety brakes take effect.

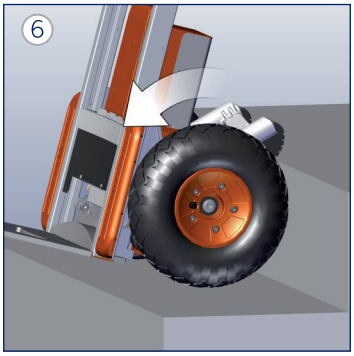

Press and hold the RUN button.
The C120 climbs down.
If the single-step mode is active, the climbing leg stops automatically after one step.

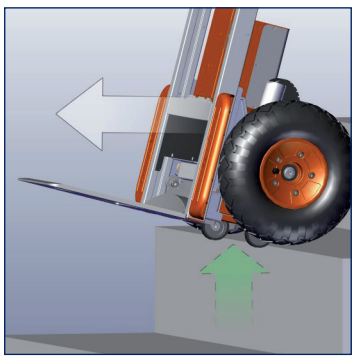

Roll the C120 forward until both safety brakes take effect.

Repeat procedure starting with image 6.

Climbing stairs downwards - spiral stairs
In principle, spiral stairs are climbed in the same way as straight stairs. However, the C120 must be positioned consistently with the spiral of the stairs after every step. After every climbing procedure, both wheels must be positioned at the edge of the step.

Manufacturer's recommendation: Activate single step mode. Practise without cargo and at the lowest speed.

5.6 Laying down on stairs / emergency stop function

WARNING - The C120 **must** be lying on the wheels because otherwise the safety brakes do not take effect!

Lay down the C120.
The safety brakes prevent it from slipping away!
Press and hold UP button, DOWN button, and RUN button until the climbing leg has been fully retracted.

Emergency stop function in hazardous situations
Release RUN button. The C120 stops automatically.
Turn the C120 off. To do so, press the ON/OFF button.
Lay down the C120 as described.

Eliminate the hazardous situation and resume operation
Turn the C120 on. To do so, press the ON/OFF button.
Press UP button or DOWN button.
Press RUN button.

5.7 Parking

NOTE - Only park the C120 on level ground.

NOTE - Charge the batteries after each use.

The automatic switch-off turns the C120 off during longer breaks. To start up the C120 again: turn C120 off and on again.

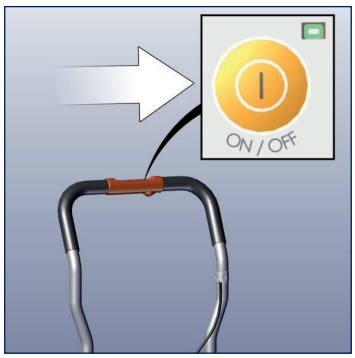

Park the C120 securely and turn it off.
To do so, press the ON/OFF button.

5.8 Transportation

WARNING - Take the weight of the individual components into account (refer to section 4.4)!

WARNING - Secure the C120 for transport in vehicles in accordance with the relevant legal regulations.

CAUTION - Turn the C120 off prior to transport.

Preparing the C120 for transport.
Fold toe plate.
Retract handle standard or (with the swivelling version) fold it completely.
Remove the battery pack to reduce the total weight.

To carry the C120, hold it by the plastic crosspiece or recessed grip of the toe plate.

Note by the manufacturer:

In accordance with the provisions by ADR and IATA, the lead-gel batteries used are considered dangerous goods (UN2800).

There are no special packaging regulations for the transport or shipment of the batteries on the road or by aircraft. Before setting out on a journey by are, we recommend to contact the airline.

6 Care and maintenance

WARNING - Repairs may only be carried out by the manufacturer, by the AAT field service, or by an authorised personnel!

WARNING - In the event of any abnormality with regard to the operating behaviour: shut down the C120 and contact the AAT field service.

6.1 Battery and charger

CAUTION - Protect battery and charger from humidity. Do not touch the battery nor the charger with wet hands. There is a risk of electric shock! The battery and the charger may be damaged!

CAUTION - Protect the charger and the voltage transformer from oil, grease, aggressive cleaning agents, thinners, and from damage.

NOTE - Charge the batteries after each use.

NOTE - Observe the user manual of the charger/charging cable for vehicle.

NOTE - Deep discharge results in loss of capacity and a reduced service life of the batteries.

NOTE - Make sure that the battery pack is safely packed for shipment (repair, disposal, etc.). To do this, no special cardboard packaging is needed.

NOTE - Keep the plug-in contacts clean.

New batteries only achieve their full capacity after several charging cycles.
The batteries are maintenance free and rechargeable. Turn the C120 off before charging.

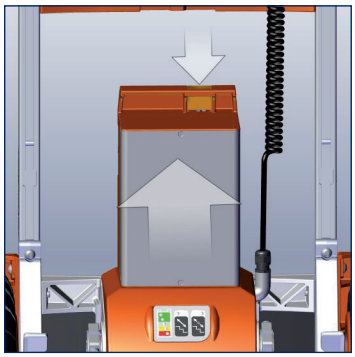

Press the release button and pull battery pack off.

Pull splash guard off.

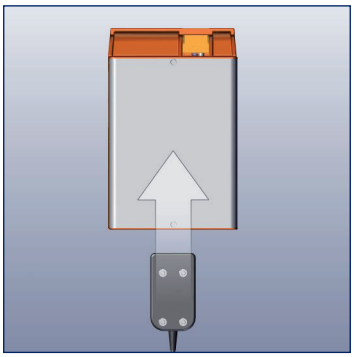

Connect the charger.

LED is lit red = battery is being charged.

LED is lit green = battery fully charged.

Note by the manufacturer:

The charger automatically changes over to trickle charge mode once the battery pack is fully charged. The purpose of the trickle charge mode is to maintain the batteries fully charged by compensating the self-discharge. The LED is lit green during the trickle charge mode.

Charging batteries in car

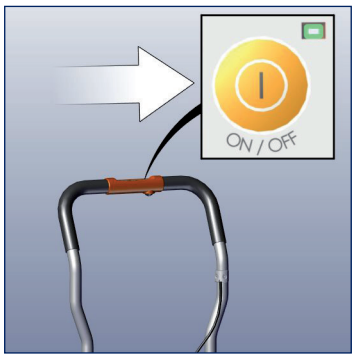

Turn the C120 off.
To do so, press the ON/OFF button.

Connect the charging cable for vehicle in the vehicle. Connect the charging cable for vehicle to the C120 via the charger.

LED is lit red = battery is being charged.

LED is lit green = battery fully charged.

Changing the set of batteries

NOTE - Observe correct polarity. Black = negative; red = positive.

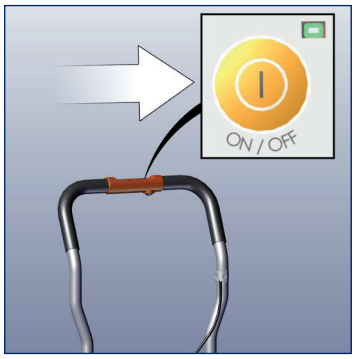

Turn the C120 off.
To do so, press the ON/OFF button.

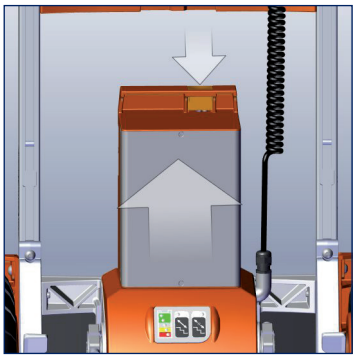

Press the release button and pull battery pack off.

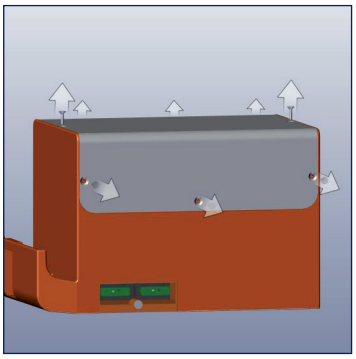

Loosen the screws of the battery cover (8 ea.).

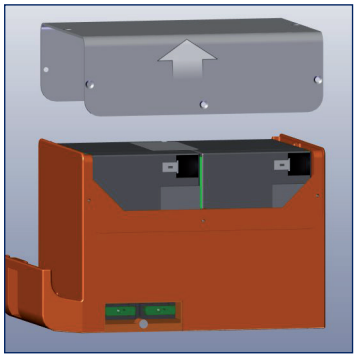

Position the battery pack as shown.
Open the battery pack.

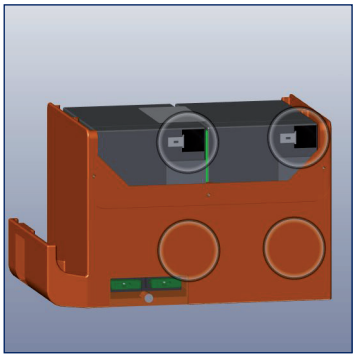

Disconnect the plug-in contacts.

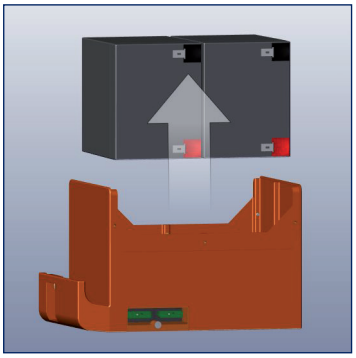

Take the batteries out.

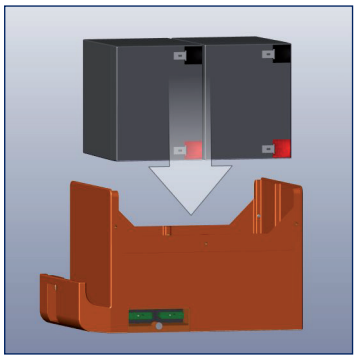

Insert new batteries.

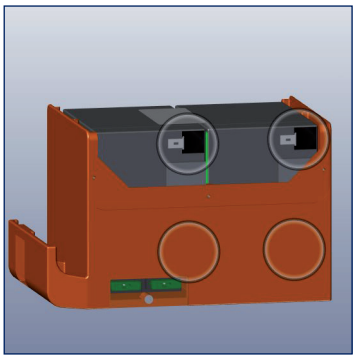

Connect the plug-in contacts.
Route the cable such that it cannot get crushed.

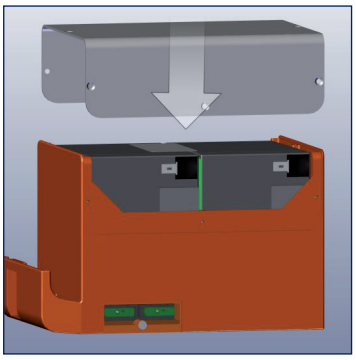

Close the battery pack.

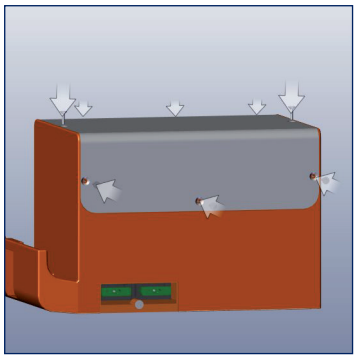

Tighten screws.

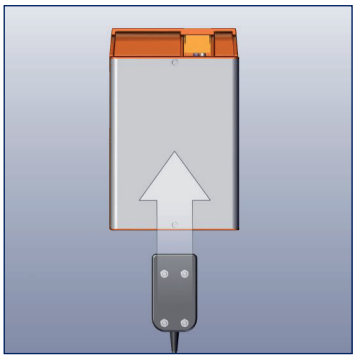

Check function:
Connect the charger.

LED is lit red = battery is being charged.

LED is lit green = battery fully charged.

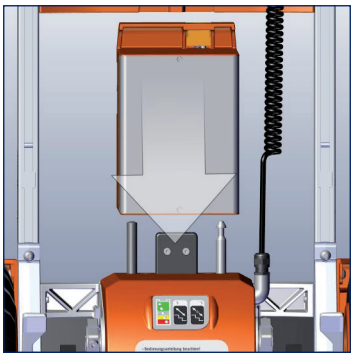

Put the battery pack on.
The battery pack locks in place automatically.

6.2 Checking brake linings / climbing feet linings and air pressure

NOTE - The minimum thickness of the brake linings (in the centre) is 1 mm. If the lining thickness is less than 1 mm or if the linings are damaged: contact the manufacturer, the AAT field service or a certified partner.

NOTE - If the linings of the climbing feet are worn or damaged: have both climbing feet replaced by the manufacturer, the AAT field service or a certified partner.

NOTE - The air pressure in the tyres must be 3.0 to 3.5 bar. Only then will the safety brakes work properly. If the air pressure is too low: inflate the tyres. If the tyres are damaged: contact the manufacturer, the AAT field service or a certified partner.

Check the brake linings of the safety brakes on a regular basis.

Check the climbing feet linings for damages on a regular basis, too.

Check air pressure on a regular basis.

6.3 Cleaning

WARNING - Check the safety brakes after cleaning (section 4.7).

WARNING - Do not smoke while cleaning.

WARNING - Use only moist cloths for cleaning. The cloths must not be wet!
No moisture shall reach the inner parts of the device!

CAUTION - Keep the C120 away from sources of ignition.

CAUTION - Do not use a high-pressure cleaner for cleaning.

NOTE - Clean the safety brakes and brake drums inside the rims with alcohol once a week (more often if soiled). Observe the hazard information for the alcohol!

NOTE - Observe the instructions of the cleaning agent manufacturer.

Wipe off any soiling on all components with a mild household cleaner.

6.4 Replacing fuses

NOTE - Do not mend nor bridge defective fuses. Replace defective fuses with new **40 A** fuses. Replacement fuses are available from the manufacturer.

NOTE - If fuses blow frequently: contact the manufacturer or a certified partner.

NOTE - Before replacing fuses, remove charger / charging cable for vehicle.

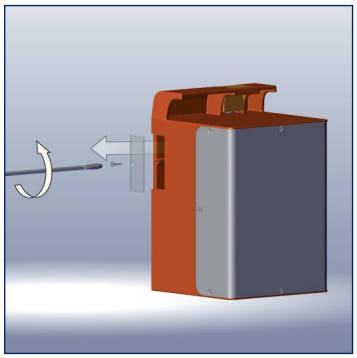

Loosen screw and remove fuse cover on the battery pack.

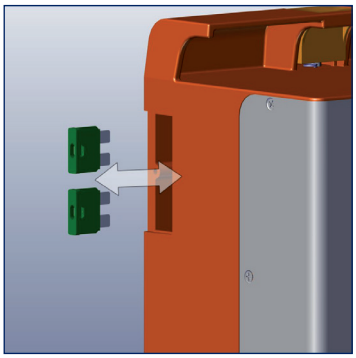

Remove covers and fuses and, then, insert new 40 A fuses.

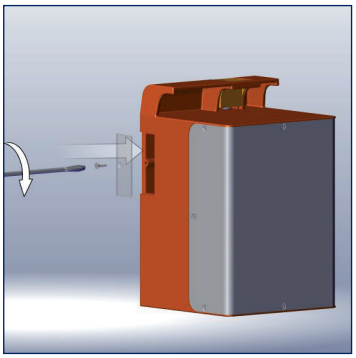

Position fuse cover and fix with screw.

6.5 Disposal

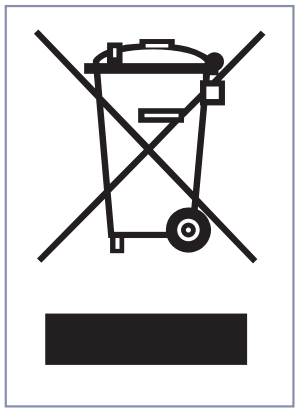

The product is marked with the crossed out dustbin according to the WEEE Directive. This marking indicates that these products must be brought to a regional recycling facility when they have reached the end of their useful life.

Please check the applicable legislation in your country for the disposal of this product as the implementation of the WEEE Directive differs in the respective countries and/or does not apply outside of the EC.

Alternatively, you can also return these products to AAT or the competent specialized dealers, where they are collected for correct disposal.

6.6 Long-term storage

If the C120 is not used for a longer period of time (e.g. several months), observe the following instructions:

» No moisture shall reach the inner parts of the device!
» Store C120 in a dry place with low relative humidity. If necessary, protect with foils!
» Store the C120 such that it is protected from solar radiation.
» Store the C120 such that it is out of reach for unauthorised persons (children in particular).
» Remove the battery pack prior to storage. Observe the notes in section 6.1.

» Clean the C120 prior to use (refer to section 6.3).
» It is mandatory to check the electrical functions and the safety brakes before starting up!

7 Fault conditions and troubleshooting

WARNING - To prevent hazardous situations, do not use the C120 if it shows any abnormal behaviour.

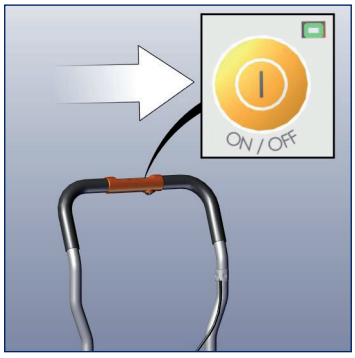

Turn the C120 on.

The red LED is flashing.
Refer to the table "Fault conditions".

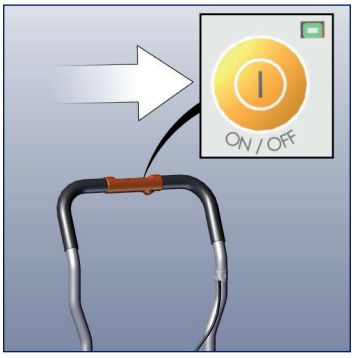

Turn the C120 off.

Turn the C120 on again.
If the LED is flashing: contact the manufacturer, the AAT field service, or a certified partner.

Fault conditions

The LED is flashing	Fault condition
1 time	Overload
2 times	Undervoltage, battery pack empty
3 times	Overvoltage
4 times	Speed control, UP button, DOWN button, RUN button, plug-in contacts, or supply cable defective
5 times	Electromagnetic brake defective
6 times	Fault in the electronics

Troubleshooting

Problem	Check and possible remedy
C120 cannot be turned on	Is the spiral cable plug plugged in and screwed tight? No: Plug in and tighten spiral cable plug.
	Is the charger connected? Yes: Disconnect the charging cable.
	Are the batteries empty? Yes: Charge the batteries.
	Does the problem persist? Yes: Contact the manufacturer, the AAT field service, a certified partner.
The C120 does not move	Contact the manufacturer, the AAT field service, a certified partner.
Battery pack isn't charging	Contact the manufacturer, the AAT field service, a certified partner.
The batteries show external damage	Contact the manufacturer, the AAT field service, a certified partner.

8 Warranty and liability

Warranty

AAT Alber Antriebstechnik GmbH grants a warranty of one year for the C120, including all its accessories (with the exception of the lead batteries). The warranty begins at the date of purchase and covers failure of material and errors in manufacturing.
For the lead batteries, always assuming correct care and maintenance, AAT Alber Antriebstechnik GmbH grants a warranty of half a year from the date of purchase.

The warranty for the C120 does not cover faults resulting from one of the following causes:

» Damage as a result of excessive strain.
» Any damage resulting from careless handling.
» Damage by force.
» Common wear parts (brake linings, climbing feet, pneumatic tyres, etc.).
» Improper or inadequate maintenance by the customer.
» Unauthorised structural changes or improper use of the C120 or its accessories.
» Use of C120 beyond the permitted lifting capacity.
» Improper charging of the lead batteries.

Liability

The manufacturer of the C120, AAT Alber Antriebstechnik GmbH, cannot be held liable for any possible damage in the following cases:

» The C120 was handled inappropriately.
» Any repair, assembly, or other work carried out by unauthorised persons.
» The C120 was not used in accordance with the user manual.
» Third-party parts were added and/or connected to the C120.
» Parts of the C120 were removed.
» The C120 was loaded beyond the max. lifting capacity (e.g. deformed axles, frames, or handles).
» Minors operated the C120 without supervision (except for minors older than 16 years under supervision).
» The C120 was operated with insufficiently charged batteries.

9 Recalls and corrective actions

If new important safety information regarding the handling of your C120 is available, we will inform you. You can always find the current version of this user manual at out website.
Should any subsequent changes be made to the product or any corrective action taken, we and/or our certified partners will inform you in writing about all the affected serial numbers. If your C120 is affected by a product recall, you will be informed about all further steps to be taken.

AAT Alber Antriebstechnik GmbH
Postfach 10 05 60 ·
72426 Albstadt · Germany
Phone: +49 7431 1295-0
Fax: +49 7431 1295-35
info@aat-online.de · www.aat-online.de

Serial number:

Ideen bewegen mehr